IMMERGAS	SERIAL NUMBER START OF SERIES	12/04/12	VICTRIX SUPERIOR TOP 32 EXPORT	71D
	4939545	3.022899		

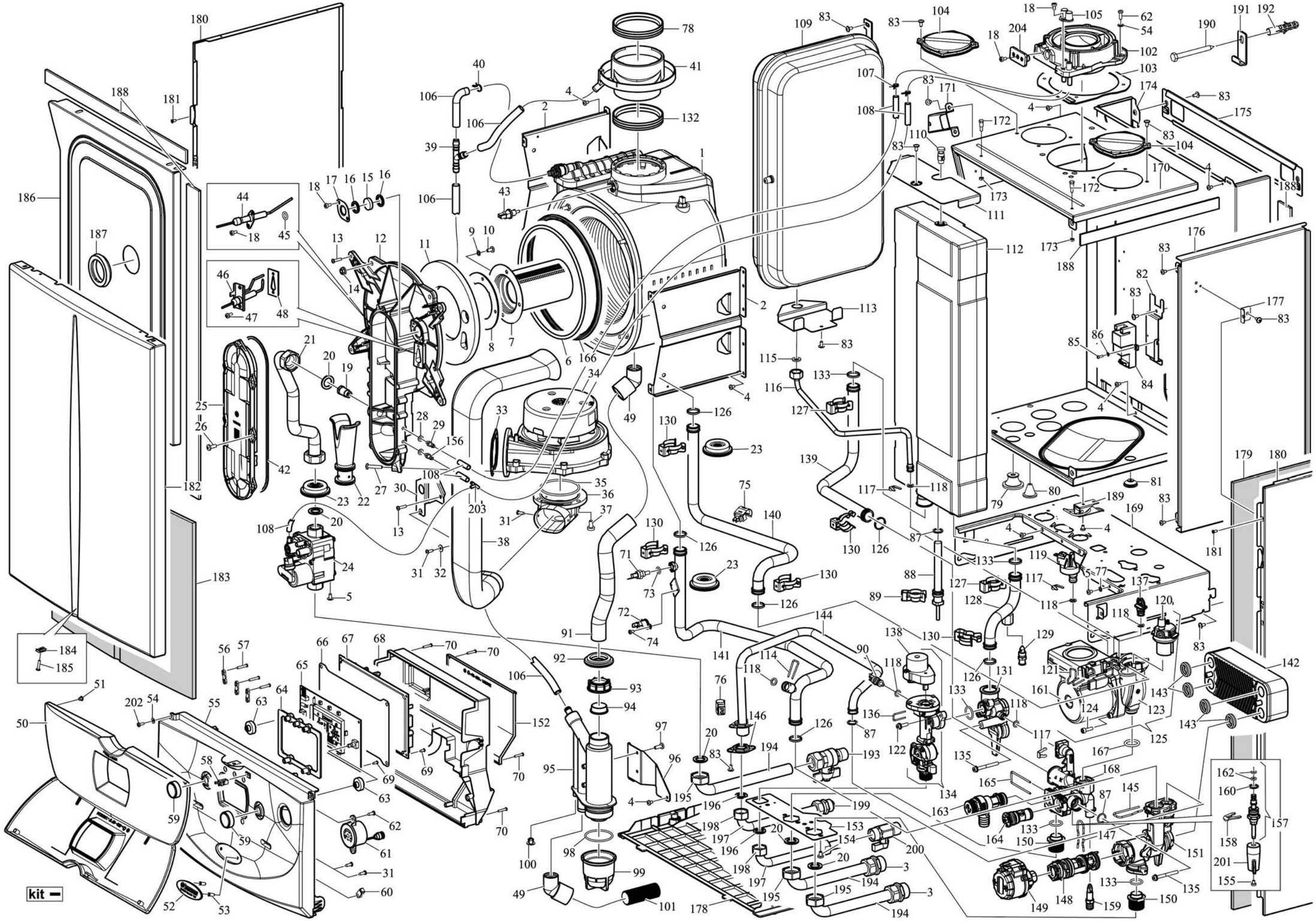

N.	CODE	DESCRIPTION	SERIAL NUMBER START OF SERIES
-	3.016908	"Blister" connection group	
-	3.020454	Hydraulic assembly	
-	3.021960	Complete control panel	
1	1.031448	Condensation module	
2	2.014832	Module mount bracket	
3	1.0375	Tube fitting (Vabco, d.18, G3/4")	
4	1.030219	Cone pointed crossheaded self-tapping screw (4,2x6,5)	
5	1.016246	Crossheaded self-forming screw (M4x8)	
6	1.020211	Cord packing	
7	1.026281	Burner	
8	1.025910	Graphite gasket for burner	
9	1.012468	Stainless steel elastic washer (M5)	
10	1.8372	Stainless steel crosshead screw (M5x10)	
11	1.024543	Front ceramic fibre panel	
12	1.023334	Gas manifold	
13	1.8532	Crossheaded self-tapping screw (3,9x16)	
14	1.025911	Nut (M6)	
15	1.028713	Ceramic glass (d.20)	
16	1.024898	Gasket for module inspection hole	
17	2.013322	Flange for module cover inspection hole	
18	1.2170	Crossheaded screw (M4x8)	
19	1.022509	Gas nozzle (d.4,00)	
19	1.028350	Gas nozzle (d.5,60)	
20	3.A0120	Gasket kit (3/4")	
21	1.031570	Gas valve - gas manifold pipe (d.18)	
22	1.025035	Venturi	
23	1.023434	Silicone fairlead (d.16)	
24	1.032847	Gas valve	
25	1.023442	Gas manifold cover	
26	1.024084	Crossheaded screw (M5x14)	
27	1.023578	Crossheaded screw (M5x25)	
28	1.016869	Annealed copper washer (10x5x1)	
29	1.024996	Brass pressure point	
30	2.014654	Air pipe support bracket	
31	1.4139	Crossheaded self-tapping screw (3,9x13)	
32	1.8599	Washer (4,3x12)	
33	1.024680	Burner gasket	
34	1.029719	Fan, EBM RG128	
35	1.026530	Nitrile O-Ring (63x3 sh)	
36	1.031102	Fan flange for pipe fixing	
37	1.0017	Crossheaded screw (M6x12)	
38	1.031101	Air intake pipe	
39	1.024387	"Y" hose union	
40	1.016967	Spring pipe clamp for silicone pipe (d.22)	
41	1.023329	Flue connection	
42	1.025357	Gas manifold cover gasket	
43	1.024296	Flue probe with O-ring	
44	1.031070	Detection electrode	
45	1.026455	Red silicone O-ring (9,19x2,62)	
46	3.017477	Ignition electrode group	
47	1.7349	Crossheaded screw (M4x10)	
48	1.030251	Ignition electrode gasket	
49	1.023581	Rubber adapter	
50	3.017249	Control panel door group	
51	1.020675	Rubber buffer	
52	1.032826	Plastic "VICTRIX Superior TOP" nameplate	
53	1.019991	Nameplate fixing hood	
54	1.011066	Washer (9x4,3x0,8)	
55	1.030730	Control panel bezel	
56	1.7908	Black cable clamp	
57	1.7967	Crossheaded self-tapping screw (3,5x19)	
58	1.019988	Push to open door lock	
59	1.022370	Knob	
60	1.4072	Clip with clamp screw hole	
61	1.032278	Manometer	
62	1.0110	Crossheaded flat pointed self-tapping screw (4,2x13)	
63	1.023324	Knob protection	
64	1.027928	Silicone keyboard	
65	1.032461	Display board	
66	1.023141	Insulator protection	
67	1.031808	PCB	
68	1.025868	Control panel back cover	
69	1.2265	"Rapid fix" self-tapping screw (3,2x9,5)	
70	1.1142	"Rapid fix" self-tapping screw (3,2x16)	
71	1.021762	NTC fast immersion probe	
72	1.025797	Klixon thermostat 100°C	
73	1.2269	9.25x1.78 O-ring, nitrile, 70 sh	
74	1.1656	Nickel-plated crosshead self-tapping screw (3,5x6,4)	
75	1.028394	NTC probe	
76	1.028395	NTC probe	
77	1.4246	Lock washer (M4)	
78	1.026615	Lip gasket (d.80)	
79	1.011131	Fairlead (d.8)	
80	1.027009	Silicone fairlead (d.2)	
81	1.027458	Silicone fairlead (d.3,8)	
82	2.014653	Spark generator bracket	
83	1.2275	Flat pointed crossheaded self-tapping screw (4,2x9,5)	
84	1.025360	Spark generator	
85	1.6984	Crossheaded flat pointed self-tapping screw (2,9x9,5)	
86	1.011163	Tropicalized washer (3,2x7x0,5)	
87	nfs	Epdm O-Ring (13,94x2,62, 70 sh)	
87	3.021695	Kit of O-rings multi-functions	
88	1.028771	"Aqua Celeris" device resistance	
89	1.020393	Pipe clip (d.14)	
90	1.022949	NTC fast immersion probe	
91	1.024216	Flexible hose (l.250)	
92	1.027007	Silicone fairlead (d.21)	
93	1.028444	Nut for flexible hose	
94	1.021452	Gasket for flexible hose	
95	3.020367	Plastic siphon	
96	2.014842	Support bracket, siphon	
97	1.1867	Crossheaded self-tapping screw (4,2x19)	
98	1.026460	Peroxide edpm O-Ring (44,12x2,62)	
99	1.029697	Siphon tank	
100	1.021892	Siphon plug	
101	1.019654	Flexible hose for siphon	
102	1.031476	Flange with sample points	
103	1.032699	Gasket for flange with sample points	
104	1.029280	Cap for hole d.80	
105	1.025690	Pressure point cap	
106	1.016187	Silicone tube (8x12)	
107	1.010500	Spring pipe clamp for silicone pipe (d.22)	
108	1.025986	Silicone pipe (4x8)	
109	1.031593	10-litre expansion tank, rectangular	
110	1.017457	Manual air vent(1/8"M)	
111	2.014593	Bracket, "Aquaceleris" hanger	
112	3.022111	"Aqua Celeris" device	
113	2.014560	Expansion vessel bracket	
114	nfs	Pressure switch locking clip	
114	3.021696	Clip kit	
115	3.A1124	Gasket kit (3/8",n°50)	
116	1.031185	Pump - expansion vessel pipe (d.8)	
117	nfs	Metal-sheet clip (d.9)	
117	3.021696	Clip kit	
118	nfs	Epdm O-Ring (7,6x2,62, 70 sh)	
118	3.021695	Kit of O-rings multi-functions	
119	1.027277	Absolute pressure switch	
120	1.027110	Automatic vent valve	
121	nfs	Pressure switch locking clip	
121	3.021696	Clip kit	
122	1.030602	Hex socket screw (M5x16)	
123	1.031364	Pump body	
124	1.010289	Tropicalized hex socket screw (M5x16)	
125	3.020451	Pump group	
126	nfs	Epdm O-Ring (18,00x2,8, 83sh)	
126	3.021695	Kit of O-rings multi-functions	
127	1.021829	Clip for exchanger pipes	
128	1.031183	"Aqua Celeris" return pipe (d.18)	
129	1.4275	Drain fitting with hose union	
130	nfs	Pipe clip (d.18)	
130	3.021696	Clip kit	
131	1.028581	Outlet sanitary water body	
132	1.023676	Gasket (d.80)	
133	nfs	Peroxide epdm O-Ring (17,86x2,62)	
133	3.021694	Two pump coupler fittings with o-ring kit	
133	3.021695	Kit of O-rings multi-functions	
134	3.022156	Flow-rate regulator group	
135	1.028645	Hex socket screw (M5x45)	
136	nfs	Pressure switch locking clip	
136	3.021696	Clip kit	
137	1.024863	Pressure switch cap	
138	1.022756	Gearmotor	
139	1.031182	D.18 pipe, outlet "Aqua Celeris"	
140	1.031186	Condensation module - pump pipe (return) (d.18)	
141	1.031187	D.18 pipe,module - heating system flow	
142	nfs	18-plate exchanger	
142	3.022784	18-plate exchanger kit	
143	nfs	Heat exchanger gasket	
143	3.021695	Kit of O-rings multi-functions	
143	3.022784	18-plate exchanger kit	
144	1.031561	D.14 pipe, hot outlet	
145	nfs	Outlet manifold clip	
145	3.021696	Clip kit	
146	2.014185	Pipe fixing flange	
147	nfs	Motor locking clip	
147	3.021696	Clip kit	
148	3.020380	Complete cartridge	
149	1.028572	3-way valve motor	
150	nfs	Pump coupler fitting	
150	3.021694	Two pump coupler fittings with o-ring kit	
151	1.028548	Housing, outlet manifold	
152	1.023112	Connection group cover	
153	2.014736	Plate mount hydraulic group	
154	1.1176	Crossheaded screw (M5x8)	
155	1.0153	Crossheaded screw (M4x6)	
156	1.031779	Brass pressure point	
157	3.022615	Filling valve group	
158	nfs	Metal-sheet clip (d.13,5)	
158	3.021696	Clip kit	
159	1.027108	Drain fitting	
160	nfs	Nbr O-Ring (11,91x2,62,70sh)	
160	3.021695	Kit of O-rings multi-functions	
161	1.031150	Pump (2-7)	
162	1.033226	Nbr O-Ring (2,84x2,62,70sh)	
163	1.028561	Safety valve (3 bar)	
164	3.021689	By-pass complete cartridge	
165	nfs	Clip	
165	3.021696	Clip kit	
166	1.025689	Gas manifold gasket	
167	nfs	19.8x3.6 O-ring	
167	3.021695	Kit of O-rings multi-functions	
168	1.028555	Return manifold	
169	2.014158	Valve supporting plate	
170	2.014557	Sealed chamber side panel	
171	2.014591	Angle bracket Lx, casing fixing	
172	1.025801	Stud M4	
173	1.1178	Nut (M4)	
174	2.014555	Frame	
175	2.013876	Frame mounting plate	
176	2.014558	Sealed chamber Rx side wall	
177	2.012130	Fixing bracket for Rx/Lx casing	
178	1.031862	Plastic grid	
179	1.026864	Casing insulating panel	
180	2.012939	Casing side	
181	1.4066	Self-tapping screw (3,5x9,5)	
182	2.014648	Front casing	
183	1.033861	Front casing insulating panel	
184	1.1378	Press-stud (11x16x3,5)	
185	1.013186	Screw (M3,5x16)	
186	3.022091	Sealed chamber cover group	
187	3.012705	Glass inspection hole group with gasket	
188	1.013154	Adhesive foam strip (d.15x3)	
189	1.020481	Sealed chamber bottom catch	
190	1.022611	Hex headed screw (8x80)	
191	2.010615	Boiler supporting bracket	
192	1.023203	Nylon masonry plug	
193	1.018094	Biconical gas cock (d.18, 1/2")	
194	1.019577	System connection pipe (d.18)	
195	1.1356	Nut for flanged end pipe (3/4" F, d.18)	
196	3.A1363	Gasket kit (1/2",n°50)	
197	1.028403	Cold water inlet pipe (d.14)	
198	2.0381	Nut (1/2" F) for flanged end pipe (d.14)	
199	1.020058	Tube fitting (Vabco, d.14, -1/2"M)	
200	1.1572	Ball valve (Vabco, d.14, 1/2" M)	
201	1.032017	Plastic knob	
202	1.6011	Crossheaded flat pointed self-tapping screw (3,5x9,5)	
203	1.6221	Hose union for silicone pipe	
204	1.025278	Plug for flange with sample points	